Itala

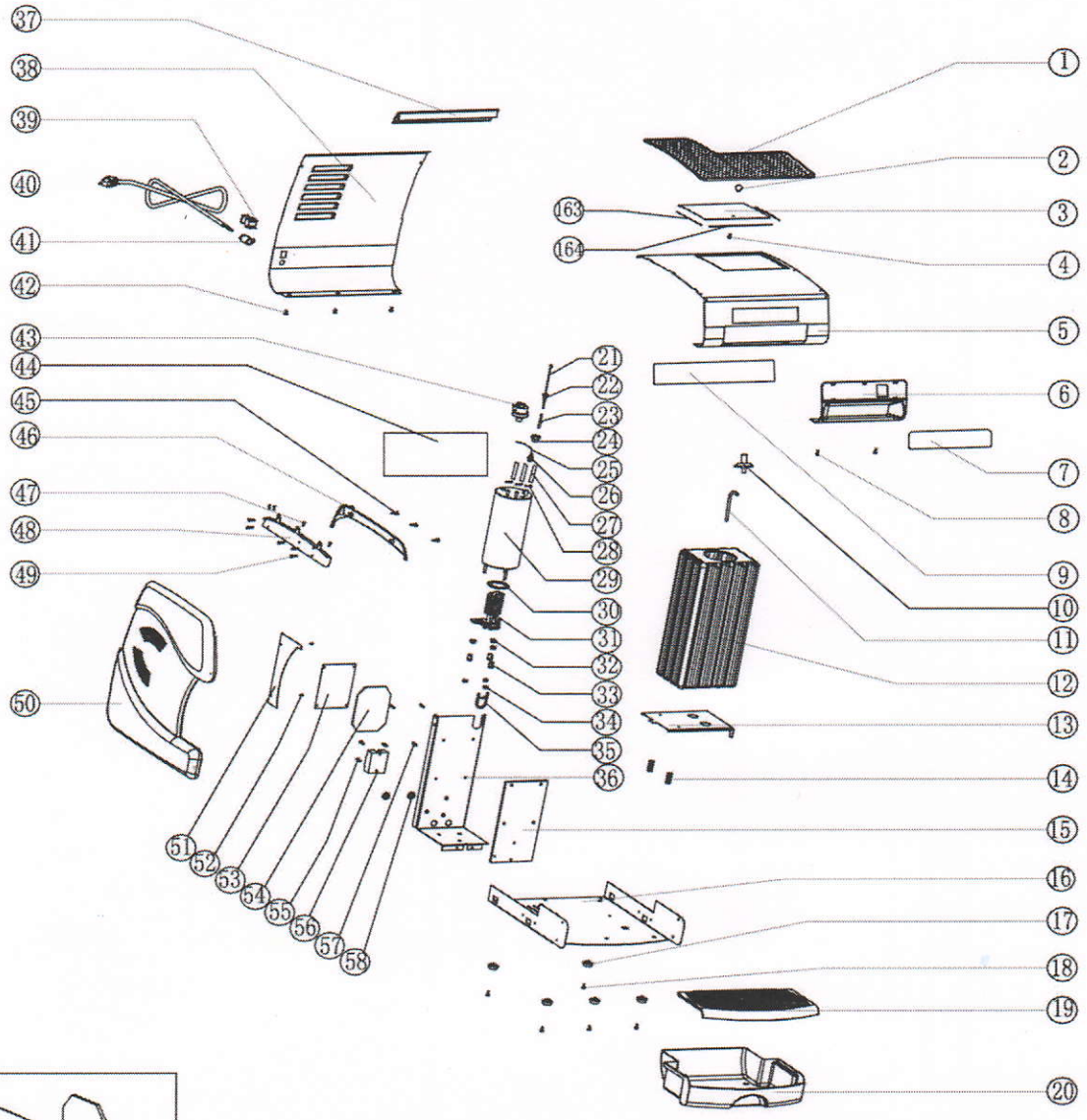
37
38
39
40
41
42
43
44
45
46
47
48
49
50
51
52
53
54
55
56
57
58
163
164
1
2
3
4
5
6
7
8
9
10
11
12
13
14
15
16
17
18
19
20
21
22
23
24
25
26
27
28
29
30
31
32
33
34
35
36

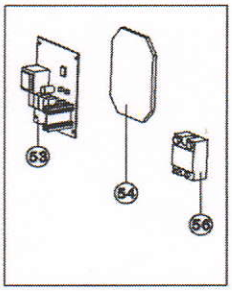
53
54
56

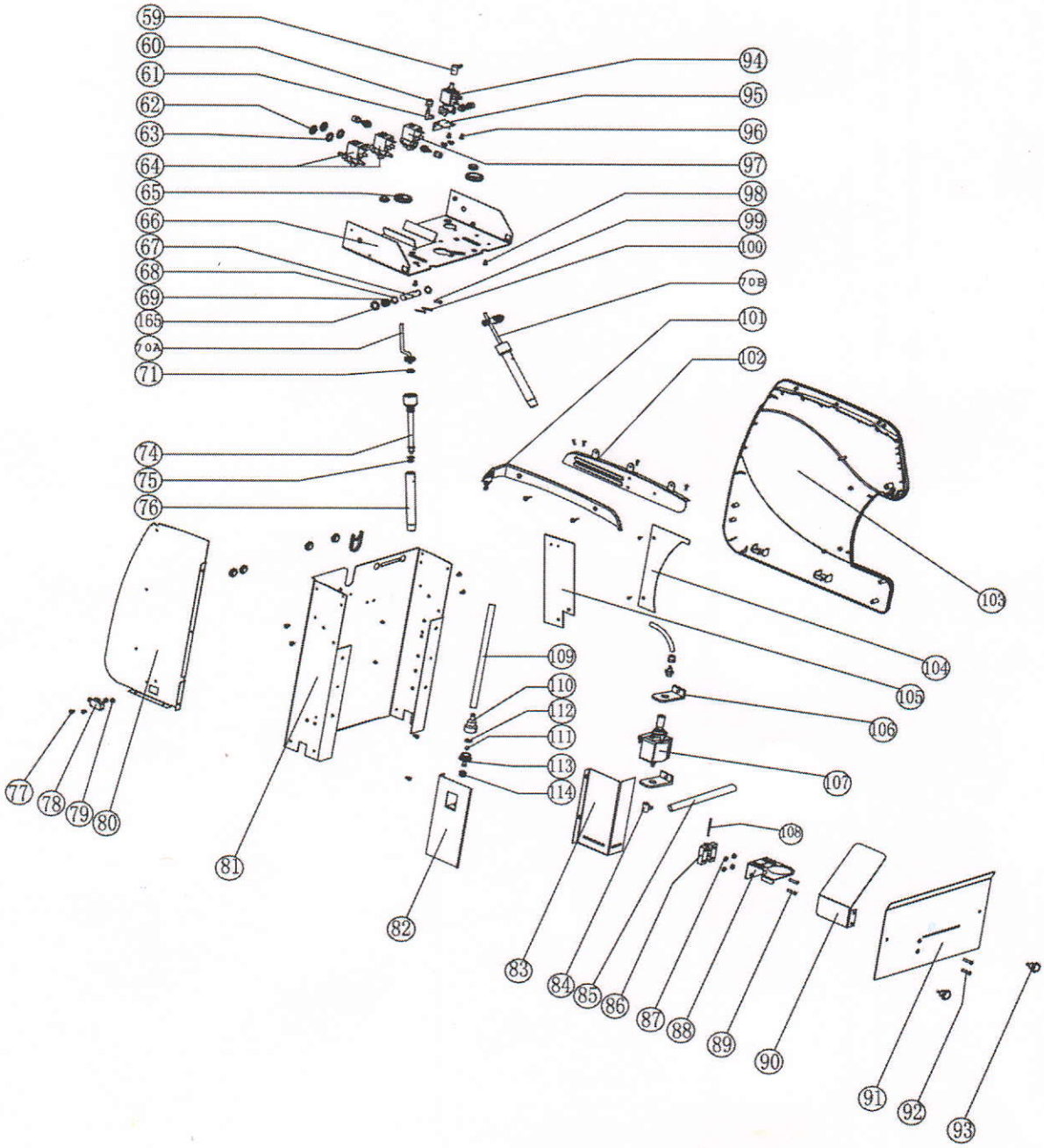
59
60
61
62
63
64
65
66
67
68
69
165
70A
71
74
75
76
77
78
79
80
81
82
83
84
85
86
87
88
89
90
91
92
93
94
95
96
97
98
99
100
70B
101
102
103
104
105
106
107
108
109
110
112
111
113
114

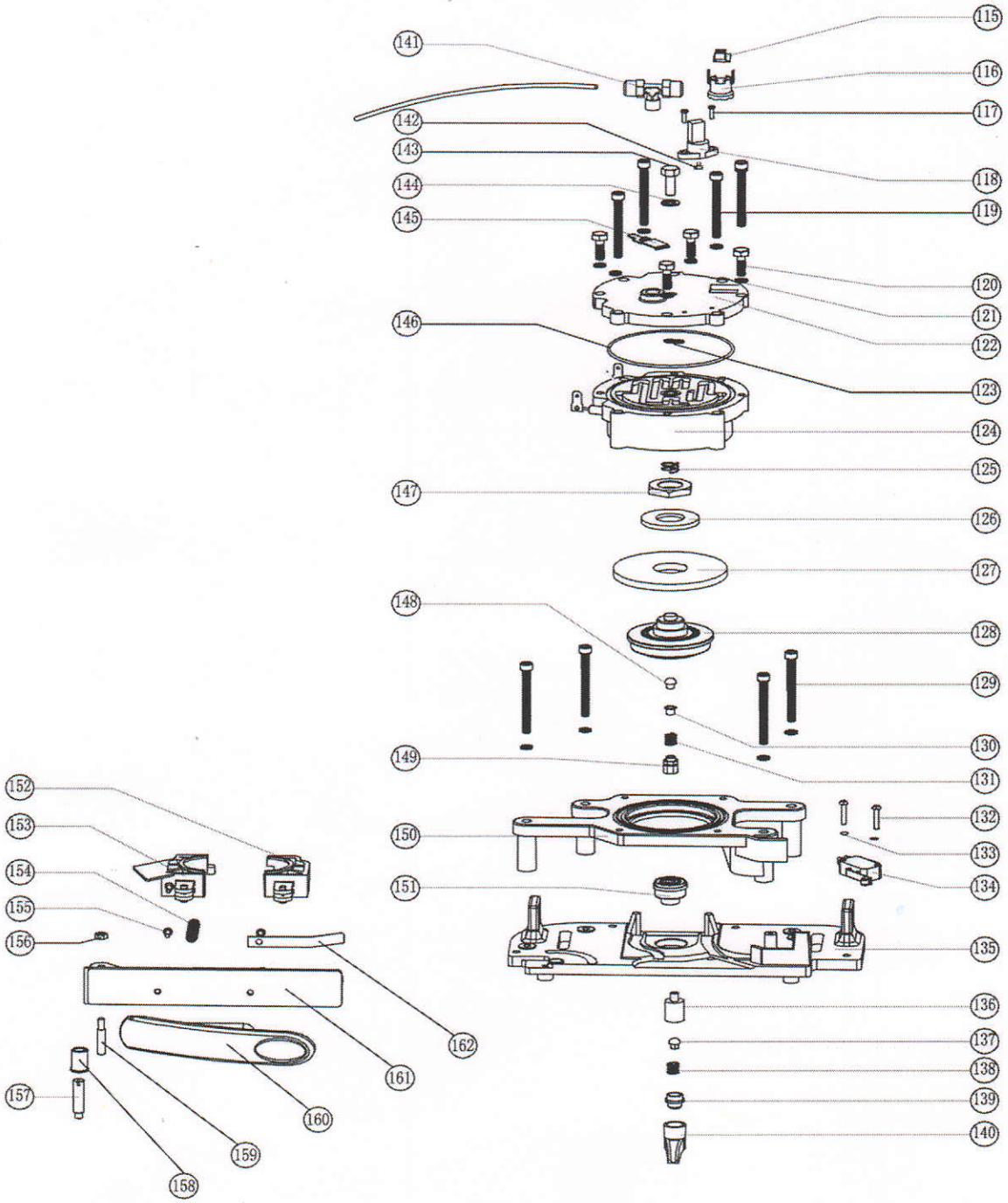
115
116
117
118
119
120
121
122
123
124
125
126
127
128
129
130
131
132
133
134
135
136
137
138
139
140
141
142
143
144
145
146
147
148
149
150
151
152
153
154
155
156
157
158
159
160
161
162

Position	Item	Description
1	IT001	SILICON PAD FOR CUP WARMER
2	IT003C-R / IT003C-B	COVER KNOB Red or Black
3	IT003C-R / IT003C-B	WATER BOTTLE COVER
4	IT003C-R / IT003C-B	SCREW FOR HANDLE
5	IT005	TOP FRONT COVER
6	IT006	DECORATIVE FACE
7	IT007	TOUCH PAD
8	IT008	PHILIPS FLAT SCREW 4*12
9	IT009	INSULATION FOR TOUCH PAD
10	402017	ONE WAY CHECK VALVE
11	350040	BREATHER L PIPE
12	IT012	WATER BOTTLE
13	IT013	WATER BOTTLE PLATE
14	660004	WATER LEVEL SPRING
15	IT015	INSULATION PAD
16	IT016	BASE PLATE
17	IT017	FEET
18	IT018	BARB BOLT FOR FEET
19	IT019	GRID
20	IT020R / IT020B	DRIP TRAY
21	407008	PROBE *
22	407008	PROBE CONNECTOR 2 *
23	407008	SEAL BAR *
24	407008	PROBE CONNECTOR *
25	204040	TEFLON TUBE 3 * 5
26	300058	FITTING 1/8 X 5/3
27	204039	AXIL TUBING 5*9
28	651008	CLAMP FOR AXIL
29	180024	BOILER
30	640018	O-RING HEAT ELEMENT
31	611009	HEATING ELEMENT
32	IT032	GB HEXAGON-LOCK-TYPE 4
33	IT033	STEEL SPACER
34	IT034	GB FASTENER NUT- M6-N
35	IT035	U CLIP FOR WIRES
36	IT036	BOILER SUPPORT BRACKET
37	IT037R / IT037B	REAR DECORATIVE STRIP
38	IT038	REAR PANEL
39	IT039	POWER SWITCH
40	495012	POWER CORD
41	IT041	POWER CORD BUSHING
42	IT042	PHILIPS FLAT SCREW M4*8

Position	Item	Description
43	407006	PRESSOSTAT
44	IT044	BOILER INSULATION SLEEVE
45	IT045	GB CROSS SCREWS TYPE 1 3*12
46	IT046R / IT046B	LEFT DECORATIVE STRIP
47	IT047	BINDING HEAD 3 X 8
48	IT048	LEFT FIX PLATE
49	IT049	GB CROSS SCREWS TYP 1 4*8
50	IT050R / IT050B	LEFT SIDE PANEL
51	IT051	LEFT INSIDE PANEL
52	IT052	GB CROSS SCREWS TYPE 129 3*6
53	450028	ELECTRONIC BOARD 110V
54	IT054	BOARD HEAT INSULATION
55	IT055	GB CROSS SCREWS TYPE 1 4*20
56	455010	SOLID RELAY NTA2425
57	IT057	PLASTIC HOLDER FOR ELECTRONIC
58	IT058	O GROMMET SMALL
59	270049	PLASTIC ELBOW CONNECTOR
60	300060	CONNECTOR NUT *
61	300060	ELBOW METAL FITTING *
62	402016	FIX VALVE NUT *
63	402016	FIX VALVE GASKET *
64	402016	ELECTROVALVE FOR STEAM *
65	IT065	RUBBER GROMMET BIG
66	IT066	COFFEE GROUP BRACKET
67	IT067	STEAM POLE FIX AXIS
68	IT068	WASHER FOR STEAM POLE FIX AXIS
69	IT069	SPRING FOR STEAM POLE FIX AXIS
70A	IT070A	BEND STEAM CONNECTOR POLE
70B	IT070B	STRAIGHT STEAM CONNECTOR POLE
71	IT111	RUBBER WASHER
74	IT074	INTERNAL TUBE FROTHER
75	640021	SMALL O-RING "BLACK"
76	IT076	EXTERNAL TUBE FROTHER
77	IT077	BINDING TYPE 1 3*20
78	403028	MICRO SWITCH FOR WATER BOTTLE
79	IT079	GB-FASTENER-NUT- M3-N
80	IT080	METAL DIVISION
81	IT081	CENTRAL PANEL
82	IT082	SAFETY VALVE BASE
83	IT083	PUMP COVER
84	270049	PLASTIC ELBOW CONNECTOR

Position	Item	Description
85	204039	AXIL TUBING 5*9
86	IT086	HINGE FOR CUP HOLDER
87	IT087	GB FASTENER NUT SNBA1 M4-N
88	IT088	CUP HOLDER
89	IT089	GB CROSS SCREWS TYPE 128 4*20
90	IT090	DIRECTION BOARD
91	IT091	FRONT PANEL
92	IT092	BOLT M4*20
93	IT093	FRONT PANEL HAND FASTENER
94	402023	THREE WAY ELECTROVALVE
95	105077	SUPPORT BRACKET Three way valve
96	IT096	GB CROSS SCREW TYPE 1 3*14
97	402021	ELECTROVALVE BOILER
98	IT098	GB CROSS SCREWS TYPE1 5*12
99	IT099	GB CROSS SCREWS TYPE1 4*12
100	IT100	BOLT
101	IT101R / IT101B	RIGHT DECORATIVE STRIP
102	IT102	RIGHT FIX PLATE
103	IT103R / IT103B	RIGHT SIDE PANEL
104	IT104	RIGHT INSIDE PANEL
105	IT105	SUPPORT PANEL
106	IT106	PUMP BRACKET
107	408013	PUMP EX4 110 VOLT
108	IT086	HINGE AXIS
109	204039	AXIL TUBING 5*9
110	402018	SAFETY VALVE TOP *
111	402018	STEEL BALL
112	IT111	RUBBER WASHER OF SAFETY VALVE
113	402018	SAFETY VALVE BOTTOM *
114	205008	SAFETY VALVE RUBBER GROMMET
115	IT115	THERMOSTAT HOLDER
116	CC-337	THERMOSTAT
117	IT117	GB CROSS SCREWS TYPE1 3*6
118	IT118	TEMPERATURE SENSOR
119	IT119	GB FASTENER SCREW HSHCS 5*45
120	IT120	GB FASTENER BOLT STBAB A 5*15
121	IT121	GRAVER WASHER 5
122	IT122	HEAT EXCHANGE PLATE COVER
123	IT123	SML COFFEE GROUP O-RING "RED"
124	IT124	HEAT EXCHANGE ELEMENT
125	C8178	HEAT EXCHANGE SPRING
126	C8062	BIG BRASS WASHER

Position	Item	Description
127	C8072	MEMBRANE
128	C8062	BRASS PISTON
129	IT129	GB FASTENER SCREWS HSHCS 5*50
130	IT130	BOCCOLINA HOLDER
131	C8084	VALVE SPRING BOCCOLINA
132	IT132	BINDING HEAD SCREW 3*16
133	IT133	LOCK WASHER 3
134	C8037	MICRO SWITCH FOR DOOR
135	IT135	HOLD PLATE
136	IT136-02	VENTURI MIDDLE CONNECTOR
137	RCC428	BOCCOLINA SMALL VALVE
138	IT136-04	VENTURI SPRING
139	IT136-05	VENTURI LOWER CONNECTOR
140	IT136-06	VENTURI SPOUT
141	300061	T CONNECTOR
142	IT118	TEMPERATURE SENSOR
143	IT143	GB FASTENER BOLT 6*16
144	IT144	GRAVER WASHER 6
145	IT145	THERMOFUSE HOLDER
146	CC-308	LRG COFFEE GROUP "O" RING
147	C8062	BIG BRASS NUT
148	RCC428	BOCCOLINA SMALL VALVE
149	C8062	BOCCOLINA & SPRING HOLDER
150	IT150	HEAT EXCHANGE BASE
151	IT136-01	VENTURI DISPENSOR
152	IT152	RIGHT JAW
153	IT153	LEFT JAW
154	C8025	JAW SPRING
155	IT155	PHILIPS FLAT SCREW ST3*12
156	C8024	GB HEXAGON LOCK TYPE 4-4N
157	IT157	DOOR HINGE INNER
158	IT158	DOOR HINGE OUTER
159	C8024	LIMIT AXIS PIN
160	IT160R / IT160B	DOOR HANDLE Black or Red
161	IT161	DOOR
162	C8168	FLAT SPRING
163	IT003	RUBBER LINER
164	IT003	RUBBER LINER

	Item	Miscellaneous Parts
	C1828	THERMOFUSE
	450023	FLAT WIRE
	IT301	TOUCH PAD CONNECTOR